DATALOGIC AND THE DATALOGIC LOGO ARE REGISTERED TRADEMARKS OF DATALOGIC S.P.A. IN MANY COUNTRIES, INCLUDING THE U.S.A. AND THE E.U.
DATALOGIC PROPRIETARY & CONFIDENTIAL INFORMATION

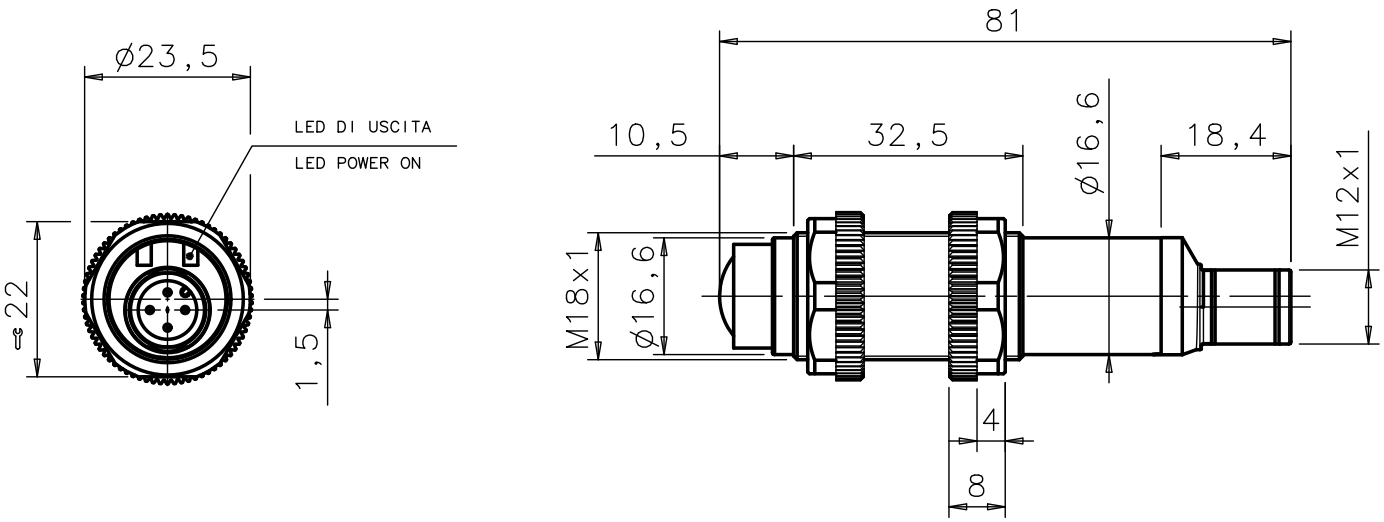

-	-	-	-	-	-
MOD.	REV.	APPLICATION	DESCRIPTION	DATE	SIGNATURE

All materials employed have to be selected among RoHS compliant materials:
the EC directives to be referred to are 2002/95/EC and correlated subsequent ones.

DIMENSIONS WITHOUT TOLERANCE DEGREE: .

NOTE: .

PRECISION DEGREE	DIMENSIONAL GROUPS				
	> 0 TO 6	>6 TO 30	> 30 TO 120	> 120 TO 315	> 315 TO 999
MEDIUM	±0.1	±0.2	±0.3	±0.5	±0.8
PRECISE	±0.05	±0.1	±0.15	±0.2	±0.3

TREAT. .
MATER. .
DES.BY F.Credi DATE 10/09/09
SCALE: 1:1
APPROV. A.Fabbri

DATALOGIC TM
www.datalogic.com

PART DESCRIPTION
Dimensional drawing
S5-5-G8-62-SG-ST4

MOLD N° .
PART N° .
PART NAME DIM-0628
REV. .